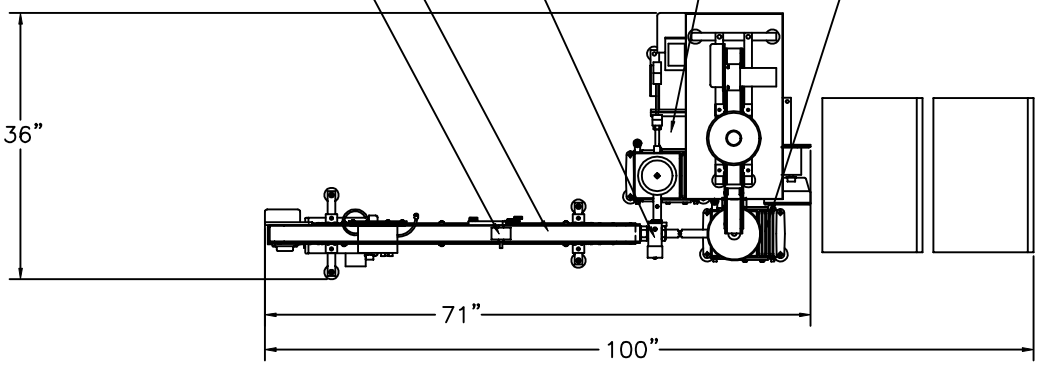

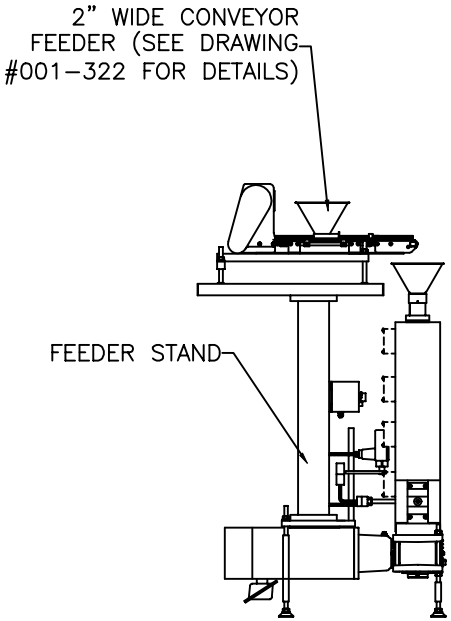

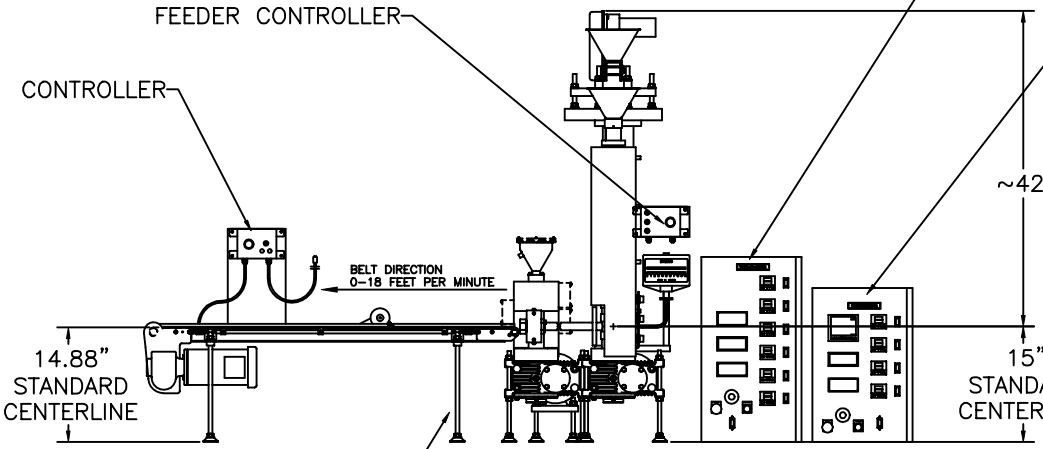

RCPR–0500 COMPOUNDER
CONTROL PANEL, 240VAC,
SINGLE PHASE, 50/60 HZ,
60 AMP SERVICE REQUIRED,
SUPPLIED WITH 6 FOOT LINE CORD.

RCP–0250 CONTROL PANEL,
240VAC, SINGLE PHASE,
50/60 HZ, 30 AMP SERVICE
REQUIRED, SUPPLIED WITH
6 FOOT LINE CORD.

NOTE:
RCP–0250 MICROTRUDER AND TUBING DIE
NOT SHOWN IN THIS VIEW FOR CLEAR VIEW
OF FEEDER STAND ASSEMBLY

NOTE: DIMENSION AND OTHER COMPONENTS
ARE SUBJECT TO CHANGE WITHOUT
NOTICE. CONTACT SALES DEPARTMENT
FOR CURRENT INFORMATION.

REV:	DESCRIPTION:	BY:	DATE:

DIMENSIONAL TOLERANCES UNLESS OTHERWISE SPECIFIED:
DECIMAL: 0.000 = ±0.005, 0.00 = ±0.030, 0.0 = ±0.062
FRACTIONAL: ± 1/64
ANGULAR: ± 30'

REFERENCE DRAWINGS:

MATERIAL:
FINISH:
HEAT TREAT:
SCALE: 1:4
WEIGHT:
DRAWN BY: DPL DATE: 4/16/02
CHECKED BY: KWL DATE: 4/16/02
APPROVED BY: DATE:

RANDCASTLE
EXTRUSION SYSTEMS, INC.
74 SAND PARK RD., CEDAR GROVE, N.J. 07009

TITLE: RCPR–0500 COMPOUNDER & RCP–0250 MICROTRUDER WITH TUBING DIE

SIZE: D
DRAWING NUMBER: 034–693
REV: